机电系统建模、辨识与控制
Modeling, Identification and Control of Mechatronic Systems

MIC_L9 State Feedback Control via Pole Placement

朱笑丛（Xiaocong Zhu） 副教授

State Space Model of RIP Example

- **Nonlinear Dynamics of RIP**

$$\begin{cases}(J_p + m_p L_c^2)\ddot{\alpha} + B_p\dot{\alpha} - m_p g L_c \sin\alpha = m_p L_r L_c \ddot{\theta}\cos\alpha \\ (J_r + m_p L_r^2)\ddot{\theta} = \dfrac{\eta_m \eta_g k_t K_g V_m}{R_m} - \dfrac{\eta_m \eta_g k_t k_m K_g^2 + B_r R_m}{R_m}\dot{\theta} + m_p L_c L_r(\ddot{\alpha}\cos\alpha - \dot{\alpha}^2 \sin\alpha)\end{cases}$$

- **Example of State Variables**

$$x = [x_1, x_2, x_3, x_4]^T = [\alpha, \dot{\alpha}, \theta, \dot{\theta}]^T$$

- **State Equations – nonlinear models**

$$\boxed{\begin{cases}(J_t + m_p L_t^{\,2})\ddot{\theta} = K_u u(t) - T_c - B_t\dot{\theta} + m_p L_t L_c(\cos\alpha)\ddot{\alpha} - m_p L_t L_c(\sin\alpha)\dot{\alpha}^2 \\ (J_p + m_p L_c^{\,2})\ddot{\alpha} = m_p g L_c \sin\alpha + m_p L_t L_c(\cos\alpha)\ddot{\theta} - B_p\dot{\alpha}\end{cases}}$$

$$\Rightarrow \begin{cases}\dot{x}_1 = x_2 \\ \dot{x}_2 = \dfrac{A_3 B_2 - A_3 B_3 x_4 - A_3 B_4 x_2^2 + A_2 B_1 - B_1 B_p x_2}{A_1 B_1 - A_3^2} \\ \dot{x}_3 = x_4 \\ \dot{x}_4 = \dfrac{A_1 B_2 - A_1 B_3 x_4 - A_1 B_4 x_2^2 + A_2 A_3 - A_3 B_p x_2}{A_1 B_1 - A_3^2}\end{cases}$$

$$\begin{cases}A_1 = J_p + m_p L_c^2 \\ A_2 = m_p g L_c \sin x_1 \\ A_3 = m_p L_r L_c \cos x_1 \\ B_1 = J_r + m_p L_r^2 \\ B_2 = \dfrac{\eta_m \eta_g k_t K_g V_m}{R_m} \\ B_3 = \dfrac{\eta_m \eta_g k_t k_m K_g^2 + B_r R_m}{R_m} \\ B_4 = m_p L_r L_c \sin x_1\end{cases}$$

State Space Model of RIP Example

- **State Equations – linearized models**

$$\begin{bmatrix} J_t + m_p L_t^2 & -m_p L_t L_c \\ -m_p L_t L_c & J_p + m_p L_c^2 \end{bmatrix} \begin{bmatrix} \ddot{\theta} \\ \ddot{\alpha} \end{bmatrix} = \begin{bmatrix} -B_t \dot{\theta} \\ -B_p \dot{\alpha} + m_p g L_c \alpha \end{bmatrix} + \begin{bmatrix} K_u \\ 0 \end{bmatrix} u(t) - \begin{bmatrix} 1 \\ 0 \end{bmatrix} T_c(t)$$

$$\underbrace{\begin{bmatrix} \dot{x}_1 \\ \dot{x}_2 \\ \dot{x}_3 \\ \dot{x}_4 \end{bmatrix}}_{\dot{x}} = \underbrace{\frac{1}{A_1 B_1 - A_3^2} \begin{bmatrix} 0 & 1 & 0 & 0 \\ A_2 B_1 & -B_p B_1 & 0 & -A_3 B_3 \\ 0 & 0 & 0 & 1 \\ A_1 A_2 A_3 & -A_1 A_3 B_p & 0 & -A_1 B_3 \end{bmatrix}}_{A} \underbrace{\begin{bmatrix} x_1 \\ x_2 \\ x_3 \\ x_4 \end{bmatrix}}_{x} + \underbrace{\frac{1}{A_1 B_1 - A_3^2} \begin{bmatrix} 0 \\ A_3 B_1 B_2 \\ 0 \\ B_2 \end{bmatrix}}_{B} u(t) + \underbrace{\frac{1}{A_1 B_1 - A_3^2} \begin{bmatrix} 0 \\ -A_3 B_1 B_2 / K_u \\ 0 \\ -B_2 / K_u \end{bmatrix}}_{B_T} T_c(t)$$

$$\begin{cases} A_1 = J_p + m_p L_c^2 \\ A_2 = m_p g L_c \\ A_3 = m_p L_r L_c \\ B_1 = J_r + m_p L_r^2 \\ B_2 = \dfrac{\eta_m \eta_g k_t K_g}{R_m} \\ B_3 = \dfrac{\eta_m \eta_g k_t k_m K_g^2 + B_r R_m}{R_m} \end{cases}$$

- **Output Equations (Assuming tip position as the output)**

$$y = \underbrace{\begin{bmatrix} l_{rt} & 0 & -1 & 0 \end{bmatrix}}_{C} x + \underbrace{0}_{D} u$$

$$\phi(s) = 2\frac{L_c}{L_t}\alpha(s) - \theta(s)$$

Rotary Inverted Pendulum Example

- Transfer Function with Rod Angle as Output

$$y = \underbrace{\begin{bmatrix} 1 & 0 & 0 & 0 \end{bmatrix}}_{C} x + \underset{D}{0} u$$

$$G(s) = \frac{1}{|sI - A|} Cadj(sI - A)B = \frac{b_2^{\alpha} s}{s^3 + a_2 s^2 + a_1 s + a_0}$$

$$a_0 = -\frac{\omega_t \omega_r^2}{1 - \bar{K}_a \bar{K}_t K_r \omega_t \omega_r^2}, a_1 = \frac{2\zeta_r \omega_t \omega_r - \omega_r^2}{1 - \bar{K}_a \bar{K}_t K_r \omega_t \omega_r^2},$$

$$a_2 = \frac{\omega_t + 2\zeta_r \omega_r}{1 - \bar{K}_a \bar{K}_t K_r \omega_t \omega_r^2},$$

$$b_2^{\alpha} = \frac{\bar{K}_t K_r \omega_t \omega_r^2}{1 - \bar{K}_a \bar{K}_t K_r \omega_t \omega_r^2}, b_0^{\alpha} = b_1^{\alpha} = 0, \omega_t = \frac{1}{\tau_t}$$

- Transfer Function with Table Angle as Output

$$y = \underbrace{\begin{bmatrix} 0 & 0 & 1 & 0 \end{bmatrix}}_{C} x + \underset{D}{0} u$$

$$G(s) = \frac{1}{|sI - A|} Cadj(sI - A)B = \frac{b_2^{\theta} s^2 + b_1^{\theta} s + b_0^{\theta}}{s[s^3 + a_2 s^2 + a_1 s + a_0]}$$

$$b_0^{\theta} = -\frac{K_t \omega_t \omega_r^2}{1 - \bar{K}_a \bar{K}_t K_r \omega_t \omega_r^2}, b_1^{\theta} = \frac{2\zeta_r \omega_t \omega_r K_t}{1 - \bar{K}_a \bar{K}_t K_r \omega_t \omega_r^2},$$

$$b_2^{\theta} = \frac{K_t \omega_t}{1 - \bar{K}_a \bar{K}_t K_r \omega_t \omega_r^2},$$

- Transfer Function with Tip Angle as Output

$$y = \underbrace{\begin{bmatrix} l_{rt} & 0 & -1 & 0 \end{bmatrix}}_{C} x + \underset{D}{0} u$$

$$G(s) = \frac{1}{|sI - A|} Cadj(sI - A)B = \frac{b_2^{\phi} s^2 + b_1^{\phi} s + b_0^{\phi}}{s[s^3 + a_2 s^2 + a_1 s + a_0]}$$

$$b_0^{\phi} = b_0^{\theta} + 2\frac{l_r}{l_t} b_0^{\alpha},$$

$$b_1^{\phi} = b_1^{\theta},$$

$$b_2^{\phi} = b_2^{\theta},$$

Formulation of State Feedback Design

- **System (Plant)**

$$\dot{\underline{x}} = \underline{A}\,\underline{x} + \underline{B}u + B_d d \quad \Rightarrow \quad P(s) = \frac{Y(s)}{U(s)} = \underline{C}\left(s\underline{I} - \underline{A}\right)^{-1}\underline{B} = \frac{1}{|sI - A|} C.Adj\{sI - A\}.B$$

$$y = \underline{C}\,\underline{x}$$

Open-Loop Poles : $|sI - A| = 0$

Open-Loop Zeros : $C.Adj\{sI - A\}.B = 0$

- **Full State Feedback Control Law**

$$u = \bar{r} - \underline{K}\,\underline{x}, \quad \underline{K} = \left[k_1, \quad k_2, \quad \ldots \quad k_n\right]$$

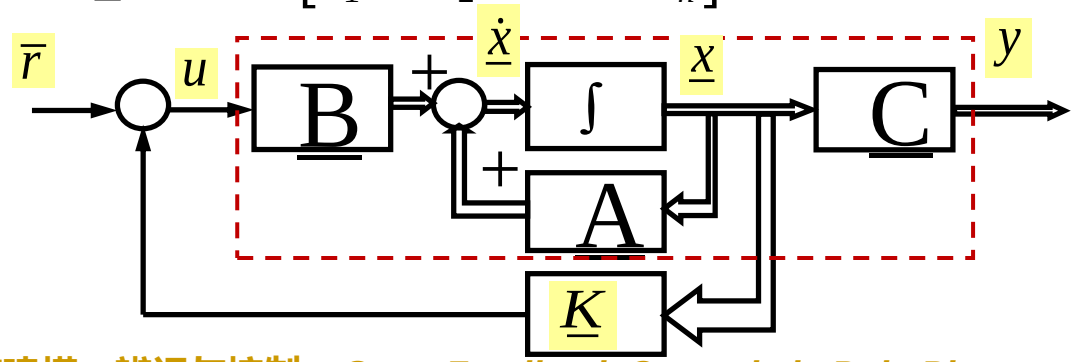

Formulation of State Feedback Design

- **Closed-Loop System**

$$\dot{\underline{x}} = \left(\underline{A} - \underline{B}\,\underline{K}\right)\underline{x} + \underline{B}\,\bar{r} + B_d d \Leftarrow \dot{x} = \underline{A}x + \underline{B}u = \underline{A}x + \underline{B}(-Kx + \bar{r}) = (\underline{A} - \underline{B}\,\underline{K})x + \underline{B}\bar{r}$$

$$y = \underline{C}\,\underline{x}$$

- **Closed-Loop Transfer Function**

$$\frac{Y(s)}{\bar{R}(s)} = \underline{C}\left(s\underline{I} - \underline{A} + \underline{B}\,\underline{K}\right)^{-1}\underline{B} = \frac{\underline{C}\,Adj\left\{s\underline{I} - \underline{A} + \underline{B}\,\underline{K}\right\}\underline{B}}{\left|s\underline{I} - \underline{A} + \underline{B}\,\underline{K}\right|}$$

- **Closed-Loop Poles and Zeros**

CL Poles : $\left|s\underline{I} - \underline{A} + \underline{B}\,\underline{K}\right| = 0$

CL Zeros : $\underline{C}\,Adj\left\{s\underline{I} - \underline{A} + \underline{B}\,\underline{K}\right\}\underline{B} = 0$

Properties of State Feedback

- **State Feedback does not introduce additional dynamics in the loop but will change the locations of closed-loop poles**

Order of CL System :

$$n = \dim(A_{CL})$$

Order of OL System :

$$n = \dim(A_{OL})$$

- **State Feedback does not change zeros**

$$\underbrace{\underline{C}\,Adj\left\{s\underline{I} - \underline{A} + \underline{B}\,\underline{K}\right\}\underline{B}}_{=0,\quad CL\ zeros} = \underbrace{\underline{C}\,Adj\left\{s\underline{I} - \underline{A}\right\}\underline{B}}_{=0,\quad OL\ zeros}, \quad \forall \underline{K}$$

Open-loop zeros remain as closed-loop zeros !

Closed-Loop Pole Assignment Problem

- **Problem Formulation**

Given the desired locations of closed-loop poles（给定闭环极点的期望位置）:

$$\phi(s) = (s - p_{CL1d})(s - p_{CL2d})\cdots(s - p_{CLnd})$$
$$= s^n + a_{CLn-1d}s^{n-1} + \cdots + a_{CL1d}s + a_{CL0d}$$

want

$$|s\underline{I} - \underline{A} + \underline{B}\underline{K}| = \phi(s)$$

Obtain a state feedback gain matrix (or vector) ***K*** such that the resulting closed-loop poles are at the above desired locations (获得状态反馈矩阵以便得到的闭环极点在上述期望位置):

Controllability, i.e., non-singularity of the controllability matrix（可控性矩阵非奇异）

$$\mathbf{W}_c = \begin{bmatrix} \mathbf{B} & \mathbf{AB} & \mathbf{A}^2\mathbf{B} & \cdots & \mathbf{A}^{n-1}\mathbf{B} \end{bmatrix}$$

Arbitrarily placement of all CL poles via state feedback, i.e., there exists a K such that eigenvalues of the CL system matrix $\boldsymbol{A}_{\mathbf{CL}}=\boldsymbol{A}-\boldsymbol{BK}$ are at any given locations（通过状态反馈设计的所有的闭环极点可任意配置）

MATLAB Solution:

```
P = [p1d;p2d;p3d;p4d];
K = place(A,B,P);
```

State Feedback Controller

- **State space model**

$$\dot{x} = Ax + Bu \qquad x = [\theta, \alpha, \dot{\theta}, \dot{\alpha}]^T;$$

$$y = Cx \qquad J_T = I_r I_p - \frac{1}{4} m_p{}^2 L_r{}^2 L_p{}^2$$

$$\begin{bmatrix} m_p L_r{}^2 + J_r & -m_p L_c L_r \\ -m_p L_c L_r & J_p + m_p L_c{}^2 \end{bmatrix} \begin{bmatrix} \ddot{\theta} \\ \ddot{\alpha} \end{bmatrix} = \begin{bmatrix} \tau_r - B_r \dot{\theta} \\ m_p L_c g \alpha - B_p \dot{\alpha} \end{bmatrix}$$

$$A = \frac{1}{J_T} \begin{bmatrix} 0 & 0 & 1 & 0 \\ 0 & 0 & 0 & 1 \\ 0 & \frac{1}{4} m_p{}^2 L_p{}^2 L_r g & -I_p b_r & -\frac{1}{2} m_p L_p L_r B_p \\ 0 & \frac{1}{2} m_p L_p g I_r & \frac{1}{2} m_p L_p L_r b_r & -I_r B_p \end{bmatrix} \qquad B = \frac{K_u}{J_T} \begin{bmatrix} 0 \\ 0 \\ I_p \\ \frac{1}{2} m_p L_p L_r \end{bmatrix}$$

With m_p=0.127kg,
L_r=0.216m,
L_p=0.336m,
J_r=0.001kg.m^2,
J_p=0.0012kg.m^2

$$A = \begin{bmatrix} 0 & 0 & 1 & 0 \\ 0 & 0 & 0 & 1 \\ 0 & 80.3 & -10.2 & -0.93 \\ 0 & 122 & -10.3 & -1.4 \end{bmatrix}, \; B = \begin{bmatrix} 0 \\ 0 \\ 83.2 \\ 80.1 \end{bmatrix}, \; C = \begin{bmatrix} 1 & 0 & 0 & 0 \\ 0 & 1 & 0 & 0 \end{bmatrix}, \; D = \begin{bmatrix} 0 \\ 0 \end{bmatrix}$$

- **Open-loop poles**

$$\det(sI - A) = 0 \qquad p_{oL} = \{-17.1, 8.34, -2.87, 0\}$$

Unstable system under open-loop control!

Balance Control

- **Performance specification**

$$\xi < 0.7, \quad \omega_n = 4\text{rad/s}, \quad |\alpha| < 15\,\text{deg}, \quad |u| < 10V$$

- **Controllability**

$$T = \begin{bmatrix} B & AB & A^2B & A^3B \end{bmatrix}, \qquad \text{rank}(T) = 4 = n$$

- **Companion matrix**

general form:

$$\bar{A} = \begin{bmatrix} 0 & 1 & 0 & \dots & 0 \\ 0 & 0 & 1 & \dots & 0 \\ \dots & & & & \dots \\ 0 & 0 & 0 & \dots & 1 \\ -a_1 & -a_2 & \dots & -a_{n-1} & -a_n \end{bmatrix}, \quad \bar{B} = \begin{bmatrix} 0 \\ 0 \\ \dots \\ 0 \\ 1 \end{bmatrix}$$

Inverted pendulum:

$$\bar{A} = \begin{bmatrix} 0 & 1 & 0 & 0 \\ 0 & 0 & 1 & 0 \\ 0 & 0 & 0 & 1 \\ 0 & 408.3 & 117.3 & -11.6 \end{bmatrix}, \quad \bar{B} = \begin{bmatrix} 0 \\ 0 \\ 0 \\ 1 \end{bmatrix}$$

- **Desired pole placement**

开环特征方程 $s^n + a_n s^{n-1} + \dots + a_1 = 0$

$$\begin{cases} p_1 = -\sigma + j\omega_d \\ p_2 = -\sigma - j\omega_d \end{cases} \qquad \begin{cases} \sigma = \xi\omega_n = 2.8 \\ \omega_d = \omega_n\sqrt{1-\xi^2} = 2.86 \end{cases} \qquad \begin{cases} p_{1,2d} = -2.8 \pm 2.86j \\ p_{3d} = -30 \\ p_{4d} = -40 \end{cases}$$

$$\bar{K} = \text{ACKER}(\bar{A}, \bar{B}, P_d),$$

$$K = \tilde{K}(T\tilde{T})^{-1} = [-5.28, 30.13, -2.65, 3.55]^T$$

- **Control law**

$$u = \begin{cases} -K(x - x_d) & \text{if } x < \varepsilon = 10\,\text{deg} \\ 0 \end{cases}$$

Balance Control (Cont'd)

- **Performance specification**

$$\xi = 0.7, \quad \omega_n = 2,4,6,8,10\text{rad/s}$$

- **Desired pole placement**

$$\begin{cases} p_1 = -\sigma + j\omega_d \\ p_2 = -\sigma - j\omega_d \end{cases} \quad \begin{cases} \sigma = \xi\omega_n \\ \omega_d = \omega_n\sqrt{1-\xi^2} \end{cases}$$

- **Control law**

$$u = \begin{cases} -K(x - x_d) & \text{if } x < \varepsilon = 10\deg \\ 0 \end{cases},$$

$$K = \text{ACKER}(A, B, P_d)$$

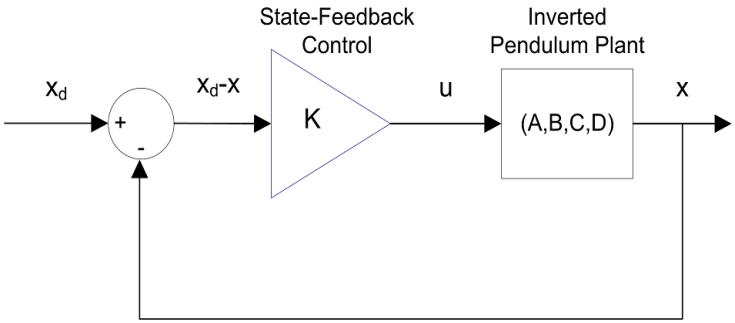

K_1=[-1.2906 22.0633 -1.3427 2.1587], ω_n=2rad/s

K_2=[-3.9533 27.7434 -2.2668 3.1448], ω_n=3.5rad/s

K_3=[-5.1636 30.0120 -2.6014 3.5010], ω_n=4rad/s

K_4=[-11.6180 40.9629 -4.0720 5.0635], ω_n=6rad/s

K_5=[-20.6542 54.9162 -5.7546 6.8463], ω_n=8rad/s

K_6=[-32.2656 71.8644 -7.6488 8.8486], ω_n=10rad/s

K_W=[-4.9 27.5 -2.21 3.1], ω_n=3.5rad/s

$$A = \begin{bmatrix} 0 & 0 & 1 & 0 \\ 0 & 0 & 0 & 1 \\ 0 & 80.3 & -10.2 & -0.93 \\ 0 & 122 & -10.3 & -1.4 \end{bmatrix}, \quad B = \begin{bmatrix} 0 \\ 0 \\ 83.2 \\ 80.1 \end{bmatrix},$$

$$C = \begin{bmatrix} 1 & 0 & 0 & 0 \\ 0 & 1 & 0 & 0 \end{bmatrix}, \quad D = \begin{bmatrix} 0 \\ 0 \end{bmatrix}$$

Swing up Control

- **Pendulum dynamics in terms of pivot acceleration**

$$J_p\ddot{\alpha}+\frac{1}{2}m_p g L_p\sin(\alpha)=\frac{1}{2}m_p L_p u\cos(\alpha)$$

$\tau_r = m_r L_r u$, where u is the pivot accleration

- **Potential and kinetic energy**

$$E_p=\frac{1}{2}m_p g L_p\left(1-\cos(\alpha)\right),\qquad E_k=\frac{1}{2}J_p\dot{\alpha}^2$$

- **Total energy and its time derivative**

$$E=\frac{1}{2}m_p g L_p\left(1-\cos(\alpha)\right)+\frac{1}{2}J_p\dot{\alpha}^2,$$

$$\begin{cases}\dot{E}=\dot{\alpha}\left(J_p\ddot{\alpha}+\frac{1}{2}m_p g L_p\sin(\alpha)\right)\\ \sin(\alpha)=\frac{1}{m_p g L_p}\left(-2J_p\ddot{\alpha}+m_p L_p u\cos(\alpha)\right)\end{cases}\Rightarrow \dot{E}=\frac{1}{2}m_p L_p u\dot{\alpha}\cos(\alpha)$$

- **Proportional control law to swing the pendulum**

$$u=(E-E_r)\dot{\alpha}\cos\alpha$$

E_r : a desired reference energy

- **Self-erecting control**

$$u=\begin{cases}K(x_d-x) & |x_2|<\varepsilon\\ \mathrm{sat}_{u_{max}}\left(\mu(E-E_r)\mathrm{sign}(\dot{\alpha}\cos\alpha)\right) & \text{otherwise}\end{cases}$$

where μ is a tunable control gain and sat_{umax} function saturates the control signal at the maximum acceleration of the pendulum pivot, u_{max}

Experimental Results

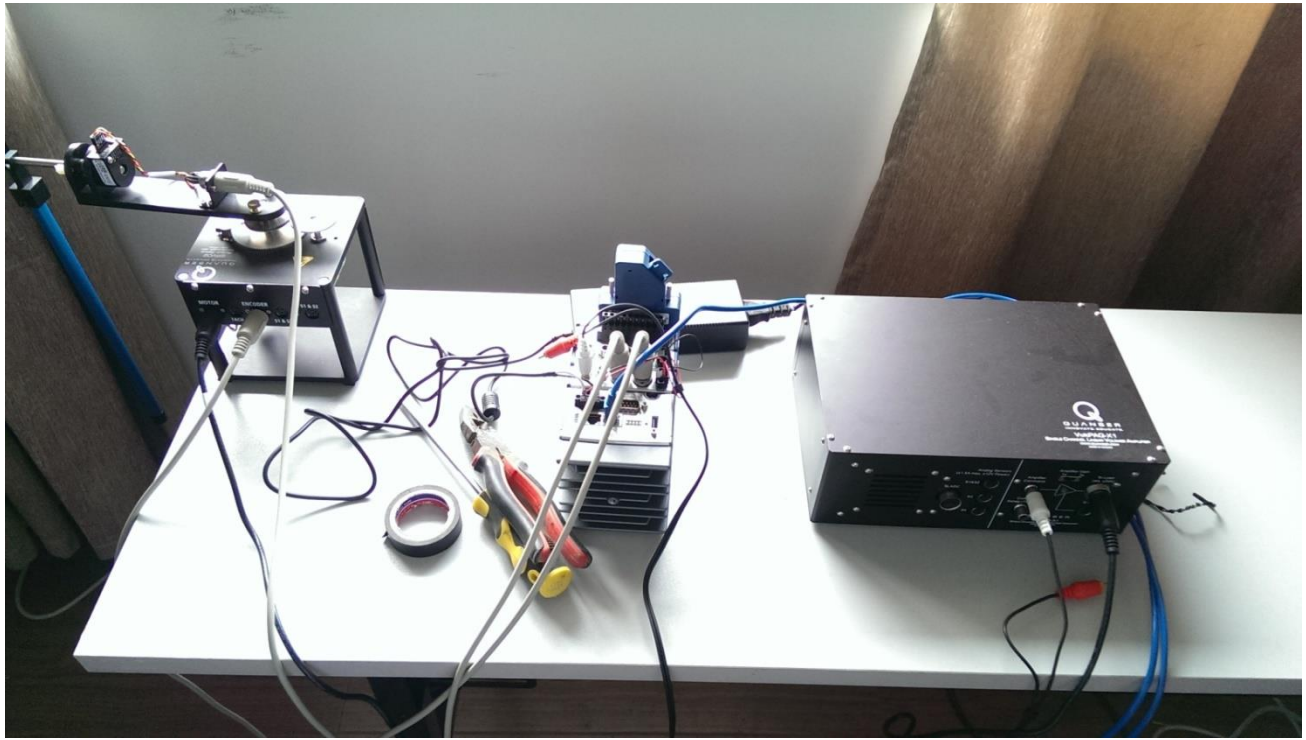

Experimental Results

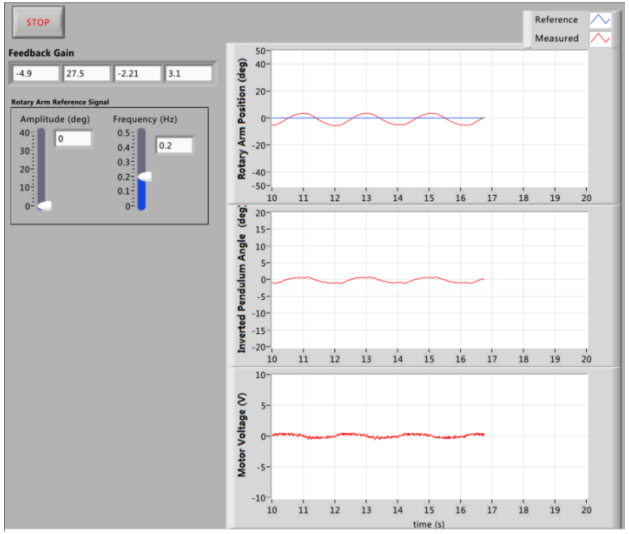

K_{NI}=[-4.9 27.5 -2.21 3.1], ω_n=3.5rad/s

Balance control with disturbance

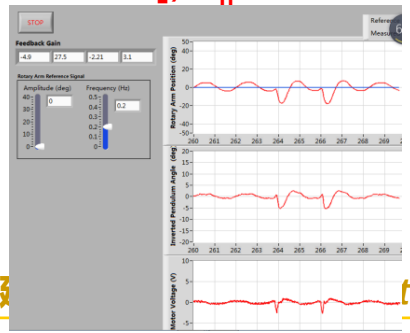

Experimental Results

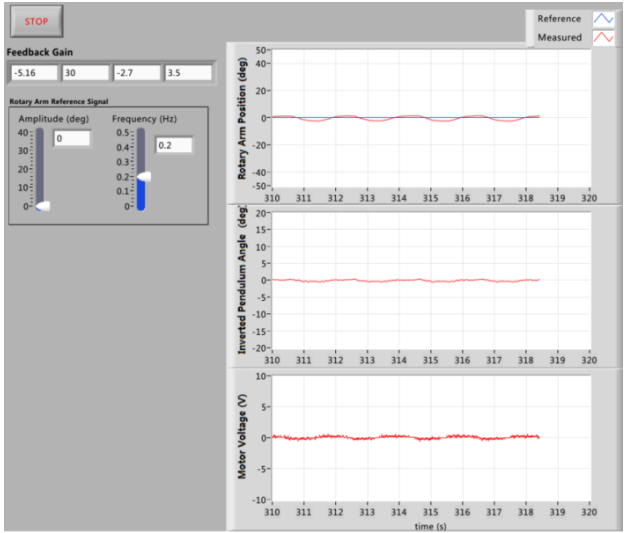

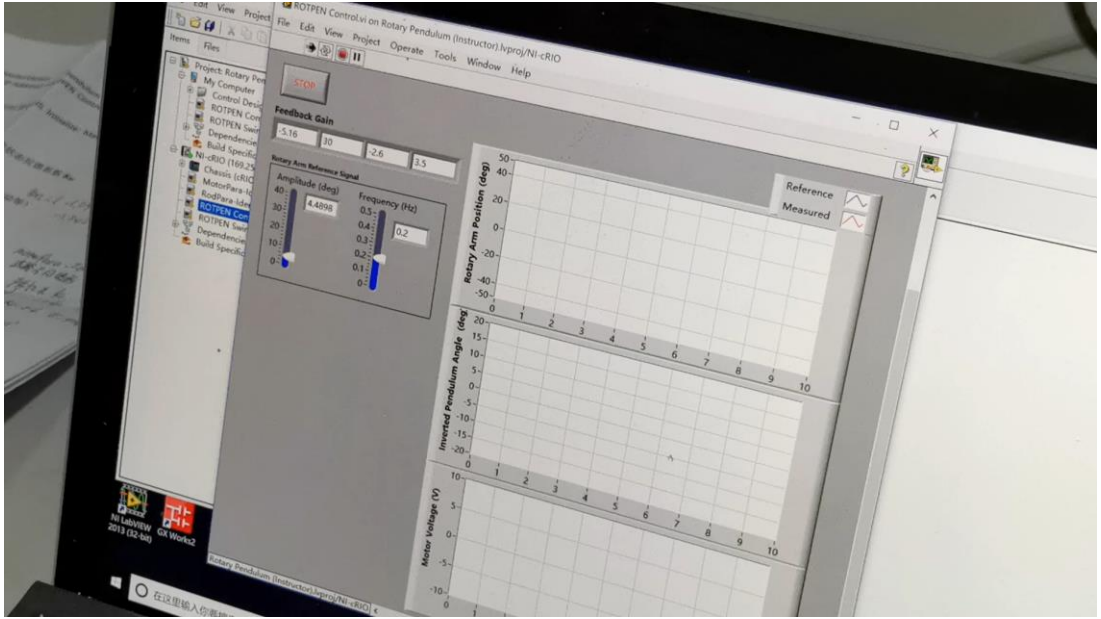

K_{NI}= =[-5.16 30.0 -2.6 3.5], ω_n=4.0rad/s

Balance control with disturbance

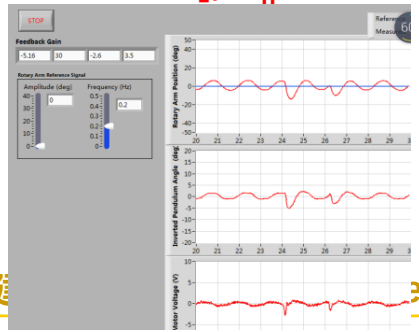

Experimental Results

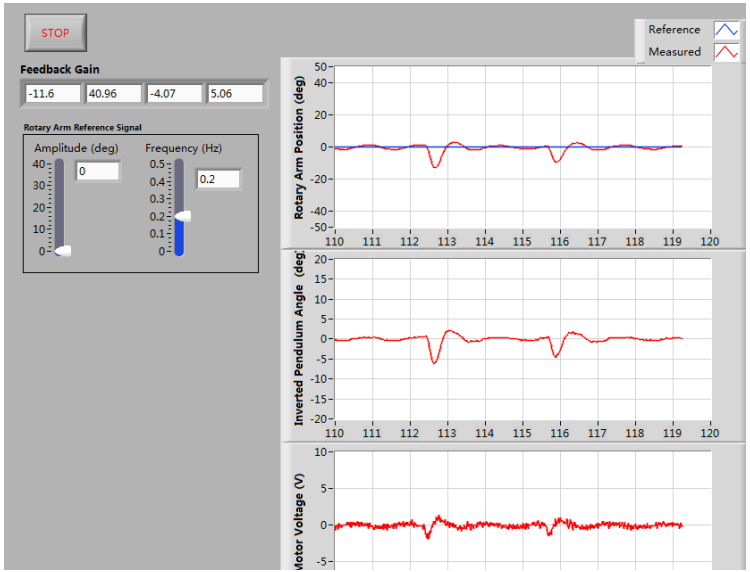

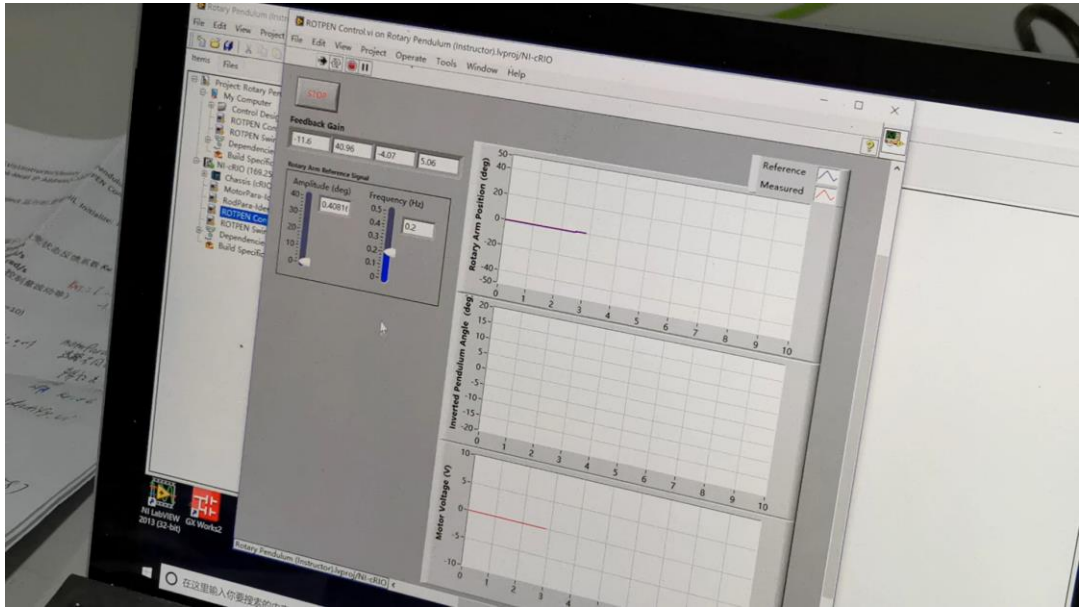

K_{NI} =[-11.6 40.96 -4.07 5.06], ω_n=6.0rad/s

Experimental Results

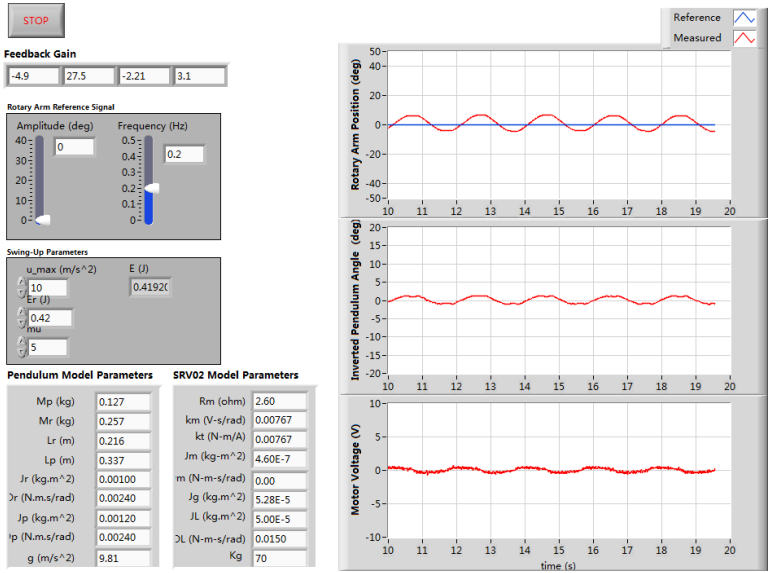

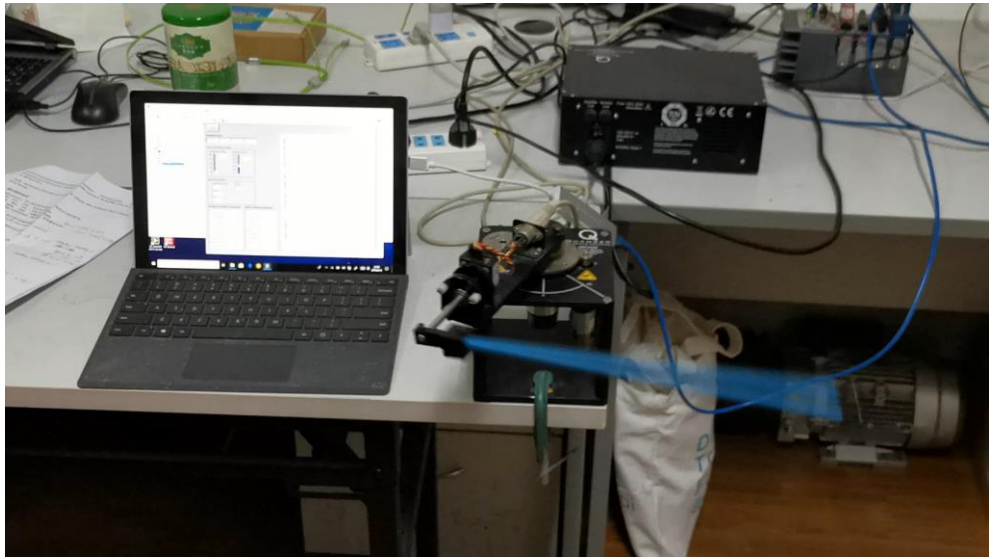

Swing up control